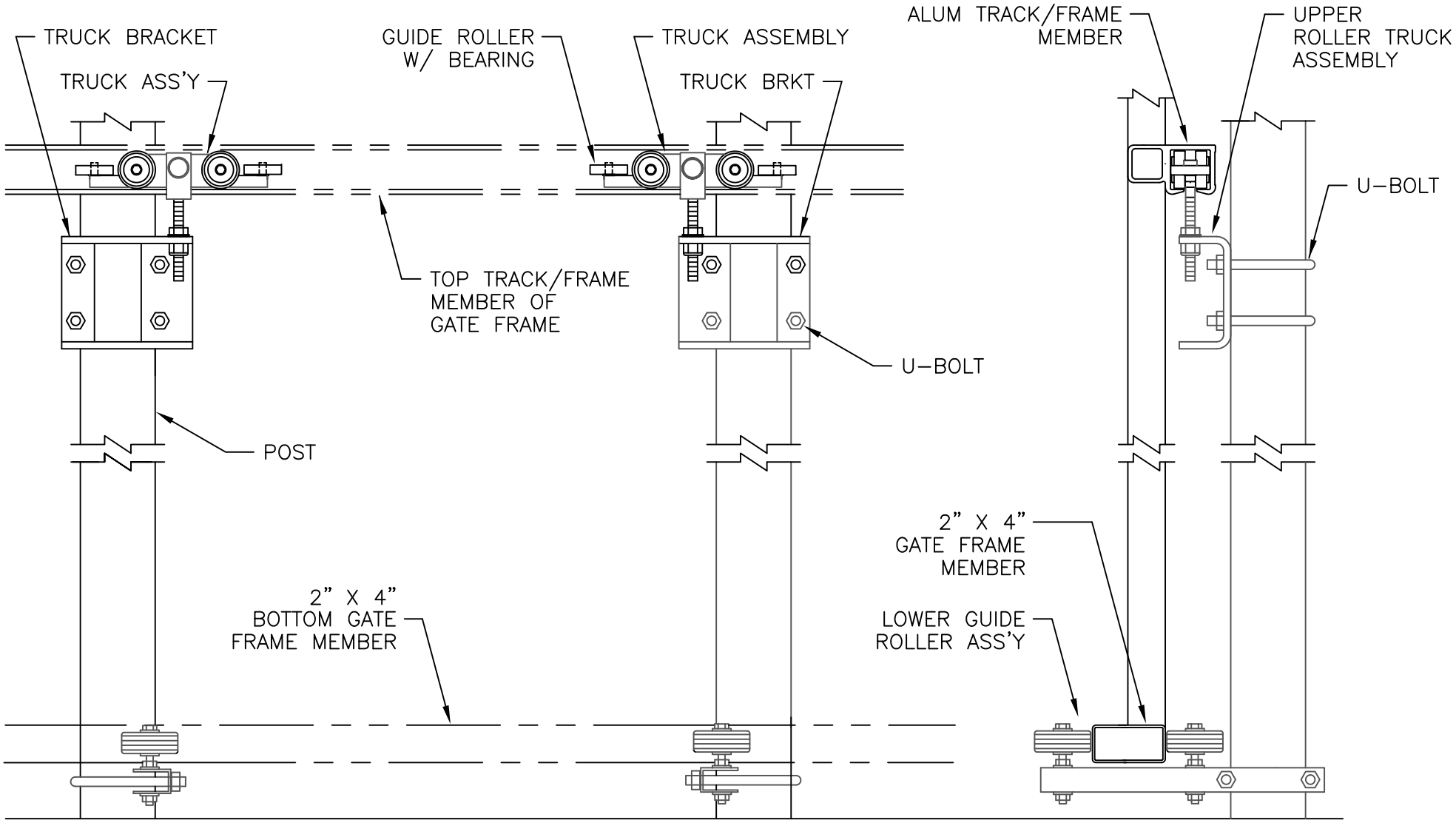

ELEVATION

NOTE: TRUCK BRACKET AND BOTTOM GUIDE ROLLER ASS'Y CAN ALSO BE BOLTED TO A SOLID GROUTED CMU WALL.

MASTER HALCO
Fencing Without Boundaries.™

ANCHOR CANTILEVER GATES
BY MASTER HALCO, INC. ORANGE, CA
PHONE 800-229-5615
WWW.MASTERHALCO.COM

FAST-TRAC® CANTILEVERED SLIDING GATE

DETAILS

DWG:	MH-FT-2.2
BY:	TPA
DATE:	01-03-08